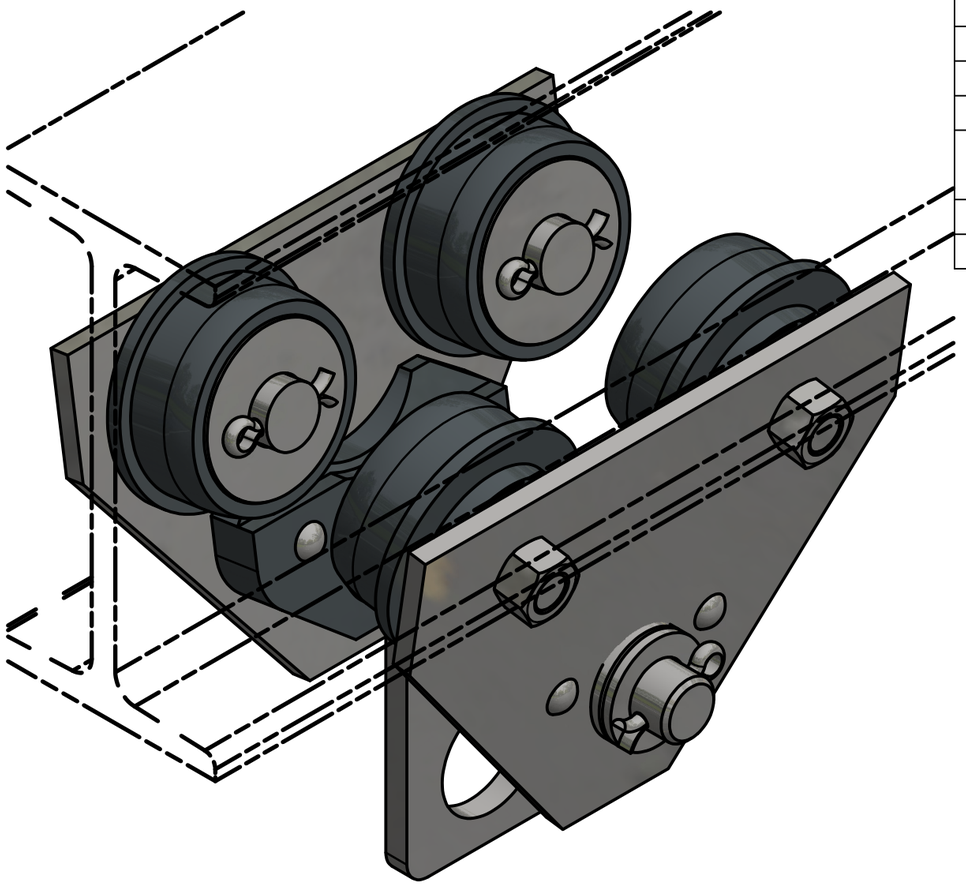

PARTS LIST

ITEM	QTY	PART NUMBER	MATERIAL	DESCRIPTION
1	2	SIDE PLATE SUB ASSEMBLY		SUB ASSEMBLY
1.1	2	SIDE PLATE	MILD STEEL	
1.2	2	GUIDE	CAST IRON	
1.3	4	RIVET	STANDARD	BUTTON HEAD, Ø10 X 60LG
2	1	HOOK	MILD STEEL	
3	4	WHEEL	CAST IRON	
4	1	AXLE	COLD ROLLED STEEL	
5	4	WHEEL AXLE	COLD ROLLED STEEL	
6	44	ROLLER BEARING	COLD ROLLED STEEL	
7	6	COTTER PIN	STANDARD	Ø6 X 40LG
8	4	LOCKNUT	STANDARD	M16 X 2 (PREVAILING TORQUE INSERT-TYPE)
9	8	ADJUSTING WASHER	STANDARD	Ø26ID X Ø44OD X 4THK
10	4	WASHER	STANDARD	Ø26ID X Ø65OD X 3THK

GENERAL NOTES:

TROLLEY ASSEMBLY TO BE MOUNTED TO S200 X 34 BEAM

LEGEND:

Ø	DIAMETER
R	RADIUS
°	DEGREES
OD	OUTSIDE DIAMETER
ID	INSIDE DIAMETER
THK	THICK
LG	LONG

METRIC

TROLLEY
SCALE 1 / 2

DIGITAL DESIGN GRAPHICS TECHNOLOGY

WWW.DDGT.NET

TOLERANCES UNLESS SPECIFIED
MILLIMETERS
WHOLE NUMBERS = ±.5
X = ±.25
XX = ±.12

ANGLES ±1 DEGREE

SURFACES 32

COURSE:	DDGT 120
INVENTOR DRAWING NAME:	TROLLEY
FIG #:	14-83
DRAFTER:	M. DOYEL
DATE:	11/27/2017
SCALE:	AS NOTED
PAGE:	1 OF 6

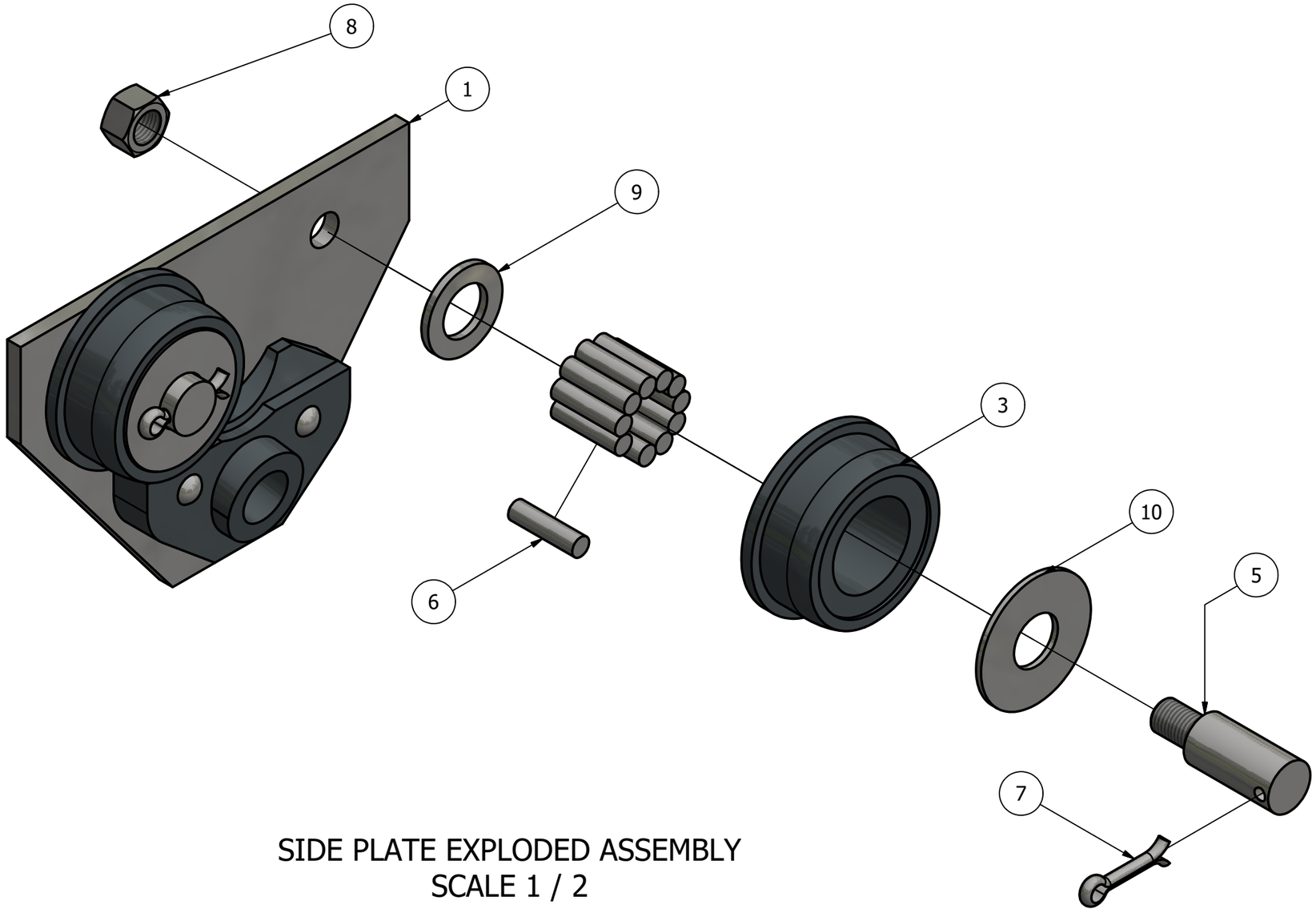

SIDE PLATE EXPLODED ASSEMBLY
SCALE 1 / 2

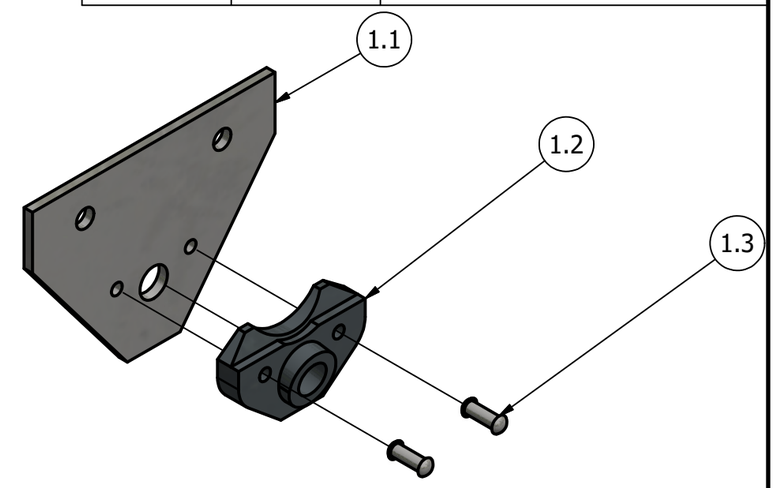

SIDE PLATE EXPLODED SUB-ASSEMBLY
SCALE 1 / 4

PARTS LIST		
ITEM	QTY	PART NUMBER
1	2	SIDE PLATE SUB ASSEMBLY
1.1	2	SIDE PLATE
1.2	2	GUIDE
1.3	4	RIVET
2	1	HOOK
3	4	WHEEL
4	1	AXLE
5	4	WHEEL AXLE
6	44	ROLLER BEARING
7	6	COTTER PIN
8	4	LOCKNUT
9	8	ADJUSTING WASHER
10	4	WASHER

LEGEND:

Ø	DIAMETER
R	RADIUS
°	DEGREES
OD	OUTSIDE DIAMETER
ID	INSIDE DIAMETER
THK	THICK
LG	LONG

METRIC

DIGITAL DESIGN
GRAPHICS
TECHNOLOGY

WWW.DDGT.NET

TOLERANCES UNLESS SPECIFIED
MILLIMETERS
WHOLE NUMBERS = ±.5
X = ±.25
XX = ±.12

ANGLES ±1 DEGREE

SURFACES 32

COURSE:	DDGT 120
INVENTOR DRAWING NAME:	TROLLEY
FIG #:	14-83
DRAFTER:	M. DOYEL
DATE:	11/27/2017
SCALE:	AS NOTED
PAGE:	2 OF 6

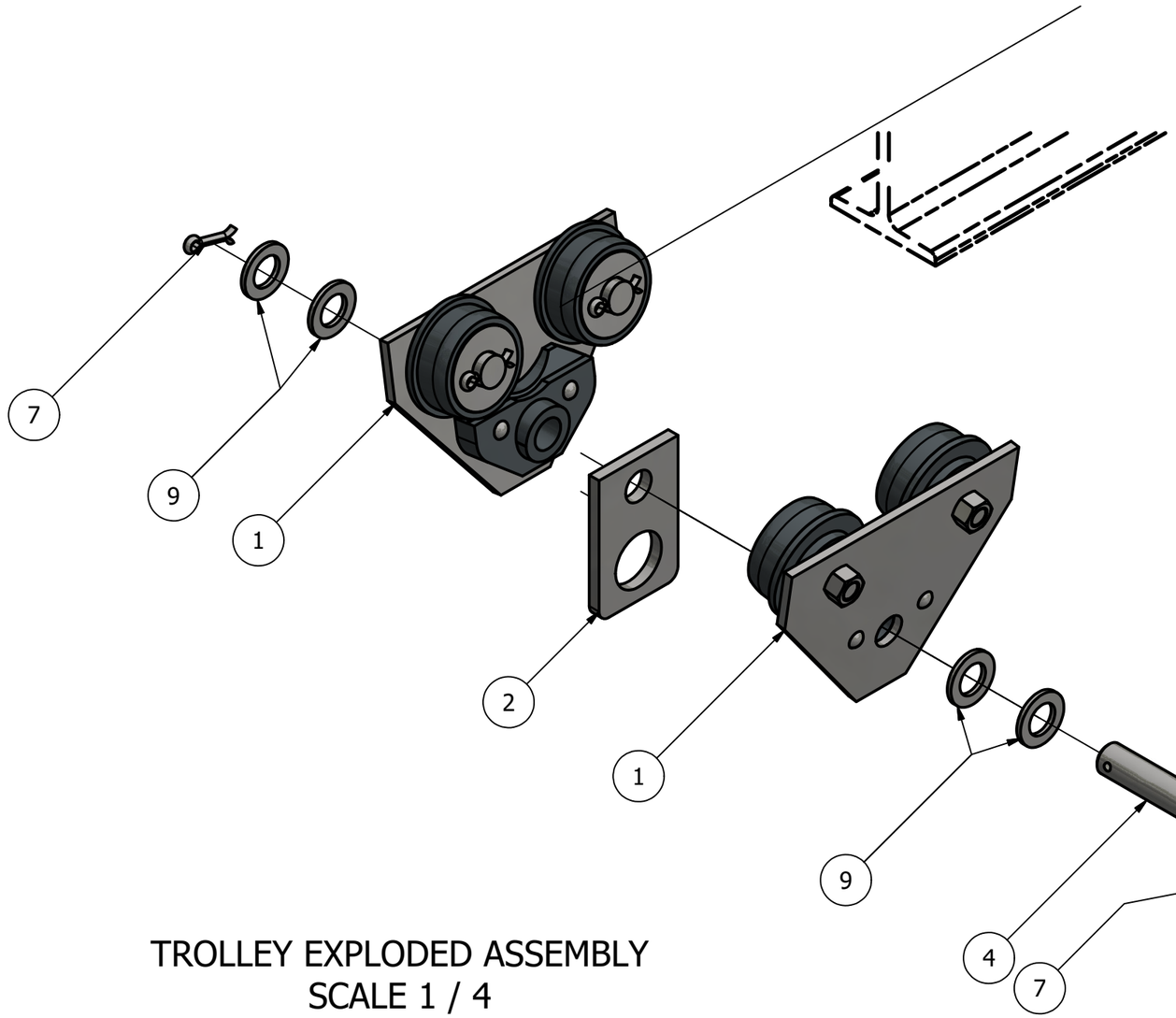

TROLLEY EXPLODED ASSEMBLY
SCALE 1 / 4

PARTS LIST		
ITEM	QTY	PART NUMBER
1	2	SIDE PLATE SUB ASSEMBLY
1.1	2	SIDE PLATE
1.2	2	GUIDE
1.3	4	RIVET
2	1	HOOK
3	4	WHEEL
4	1	AXLE
5	4	WHEEL AXLE
6	44	ROLLER BEARING
7	6	COTTER PIN
8	4	LOCKNUT
9	8	ADJUSTING WASHER
10	4	WASHER

LEGEND:

Ø	DIAMETER
R	RADIUS
°	DEGREES
OD	OUTSIDE DIAMETER
ID	INSIDE DIAMETER
THK	THICK
LG	LONG

METRIC

DDGT

DIGITAL DESIGN
GRAPHICS
TECHNOLOGY

WWW.DDGT.NET

TOLERANCES UNLESS SPECIFIED
MILLIMETERS
WHOLE NUMBERS = ±.5
X = ±.25
XX = ±.12

ANGLES ±1 DEGREE

SURFACES 32

COURSE:	DDGT 120
INVENTOR DRAWING NAME:	TROLLEY
FIG #:	14-83
DRAFTER:	M. DOYEL
DATE:	11/27/2017
SCALE:	AS NOTED
PAGE:	3 OF 6

PARTS LIST		
ITEM	QTY	PART NUMBER
1.1	4	SIDE PLATE

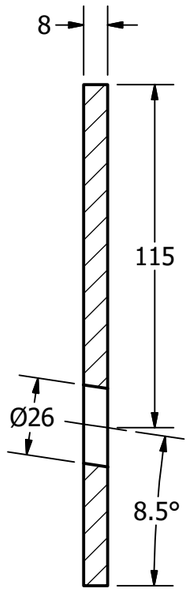

SECTION A-A
SCALE 1 / 2

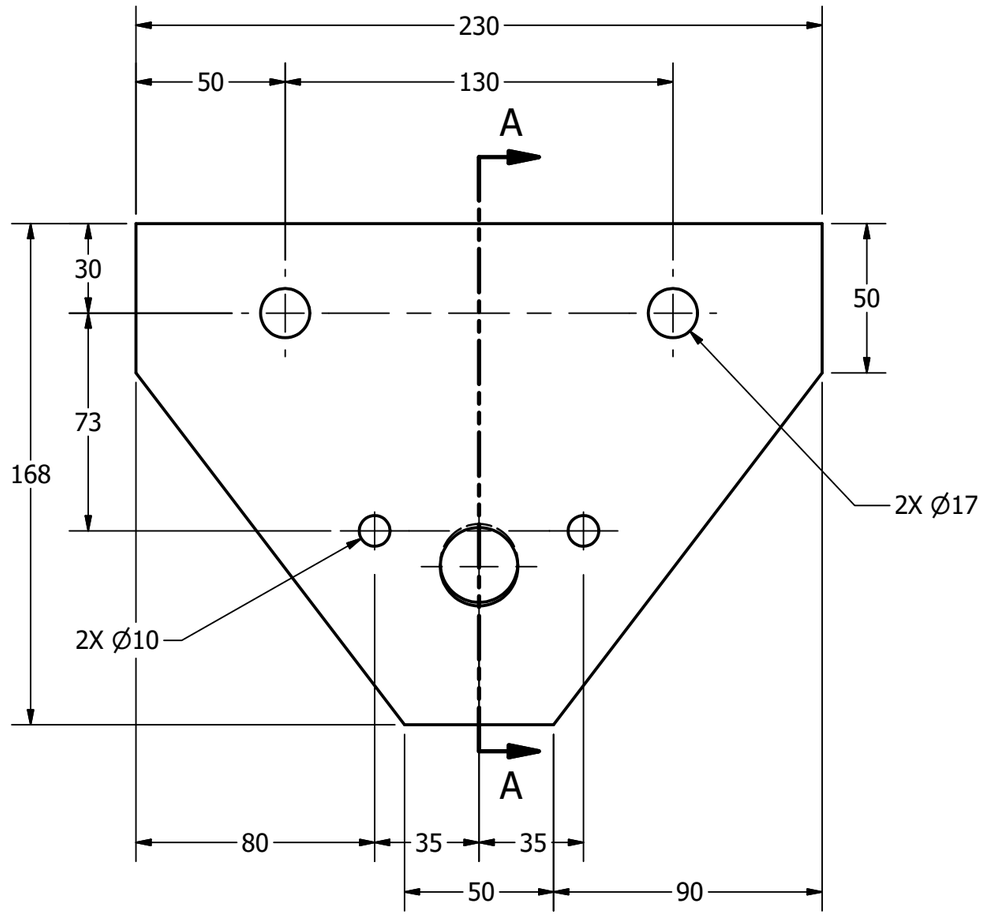

SIDE PLATE
SCALE 1 / 2

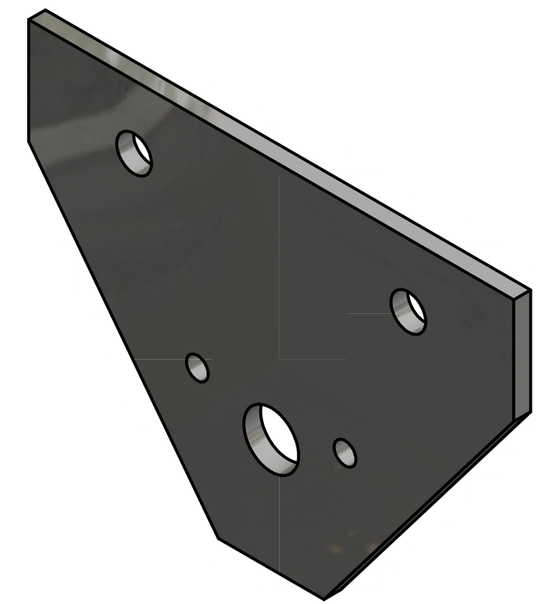

LEGEND:

Ø	DIAMETER
R	RADIUS
°	DEGREES
OD	OUTSIDE DIAMETER
ID	INSIDE DIAMETER
THK	THICK
LG	LONG

METRIC

DIGITAL DESIGN
GRAPHICS
TECHNOLOGY

WWW.DDGT.NET

TOLERANCES UNLESS SPECIFIED
MILLIMETERS
WHOLE NUMBERS = ±.5
X = ±.25
XX = ±.12

ANGLES ±1 DEGREE

SURFACES 32

COURSE:	DDGT 120
INVENTOR DRAWING NAME:	TROLLEY
FIG #:	14-83
DRAFTER:	M. DOYEL
DATE:	11/27/2017
SCALE:	AS NOTED
PAGE:	4 OF 6

PARTS LIST		
ITEM	QTY	PART NUMBER
1.2	4	GUIDE
2	1	HOOK
6	44	ROLLER BEARING

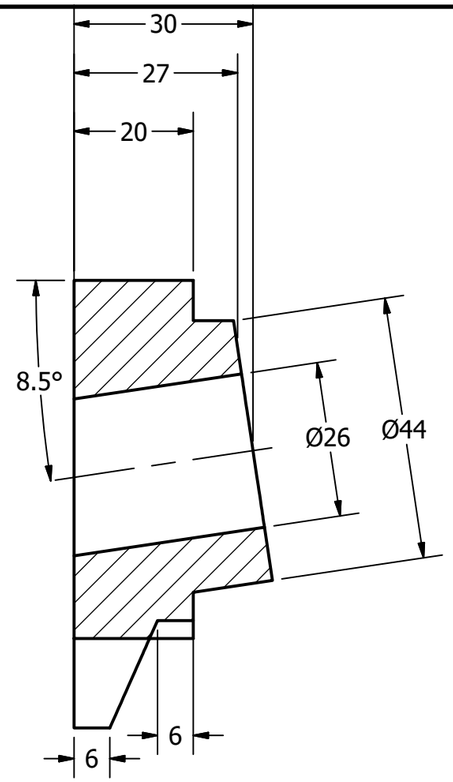

SECTION B-B
SCALE 1 : 1

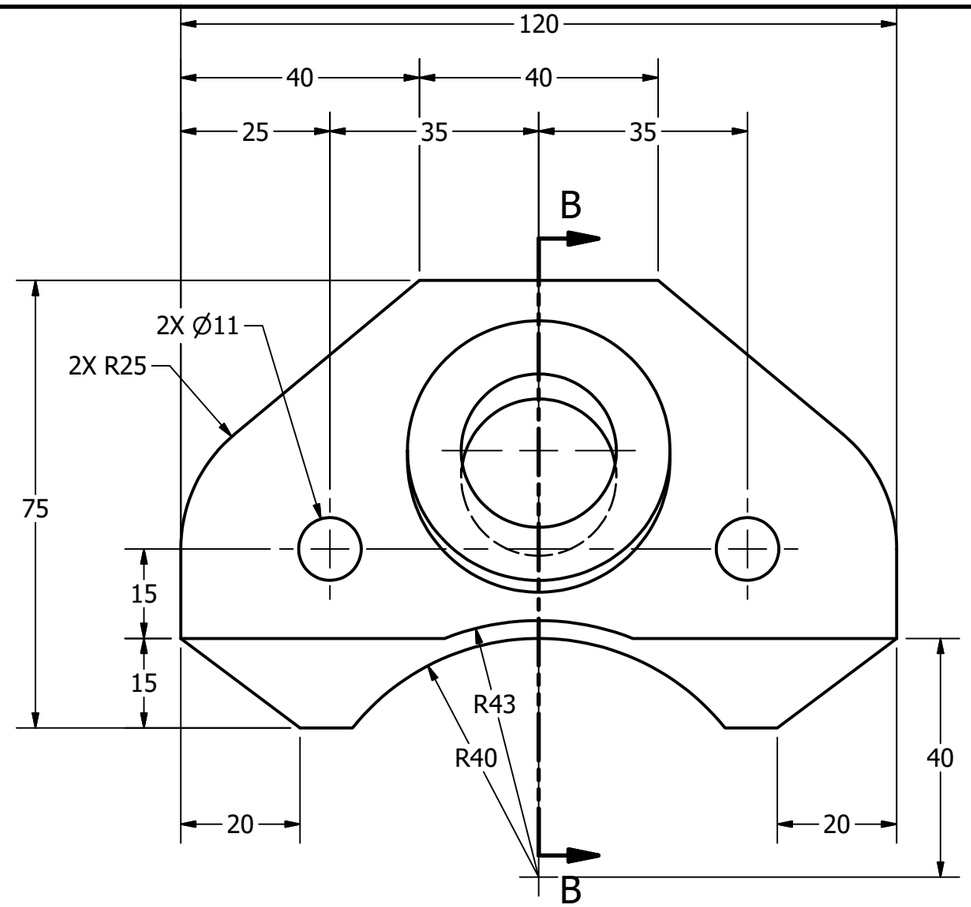

GUIDE
SCALE 1 : 1

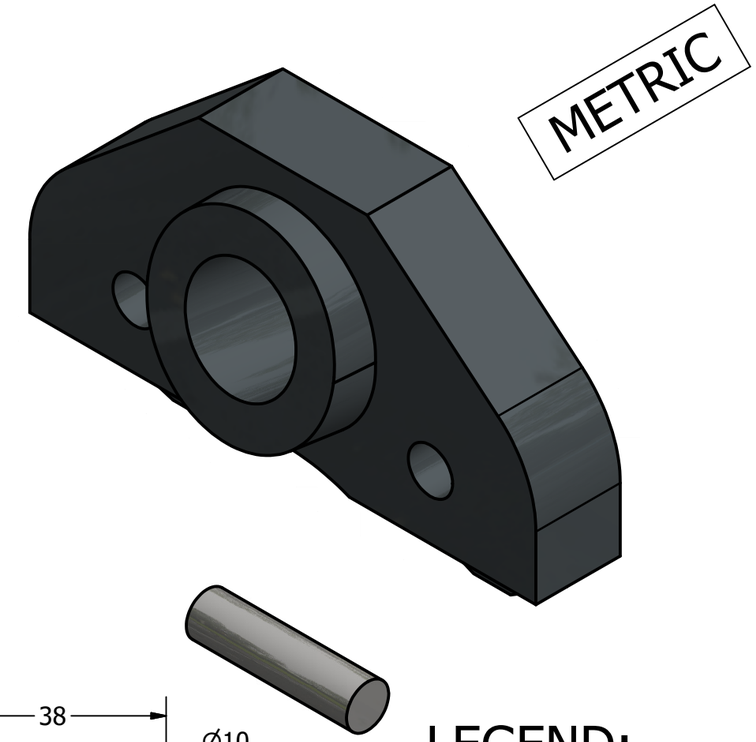

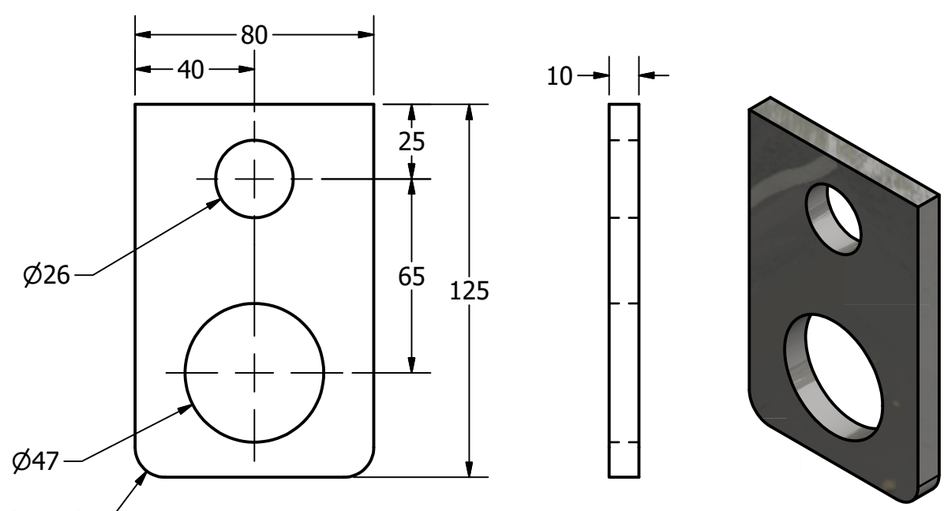

HOOK
SCALE 1 / 2

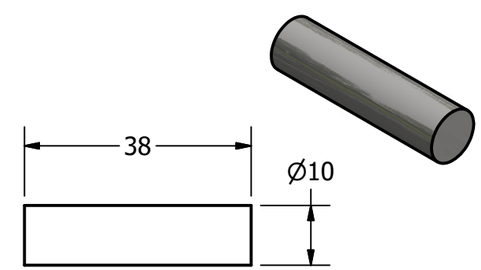

ROLLER BEARING
SCALE 1 : 1

LEGEND:

Ø	DIAMETER
R	RADIUS
°	DEGREES
OD	OUTSIDE DIAMETER
ID	INSIDE DIAMETER
THK	THICK
LG	LONG

DIGITAL DESIGN
GRAPHICS
TECHNOLOGY

WWW.DDGT.NET

TOLERANCES UNLESS SPECIFIED
MILLIMETERS
WHOLE NUMBERS = ±.5
X = ±.25
XX = ±.12

ANGLES ±1 DEGREE

SURFACES 32

COURSE:	DDGT 120
INVENTOR DRAWING NAME:	TROLLEY
FIG #:	14-83
DRAFTER:	M. DOYEL
DATE:	11/27/2017
SCALE:	AS NOTED
PAGE:	5 OF 6

PARTS LIST		
ITEM	QTY	PART NUMBER
3	4	WHEEL
4	1	AXLE
5	4	WHEEL AXLE

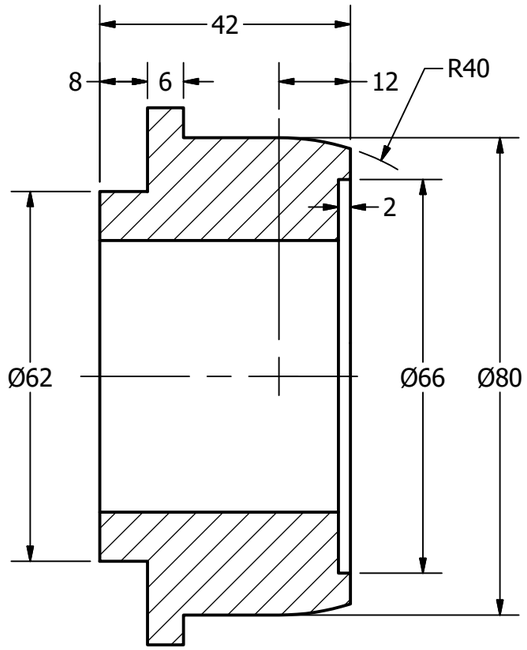

SECTION D-D
SCALE 1 : 1

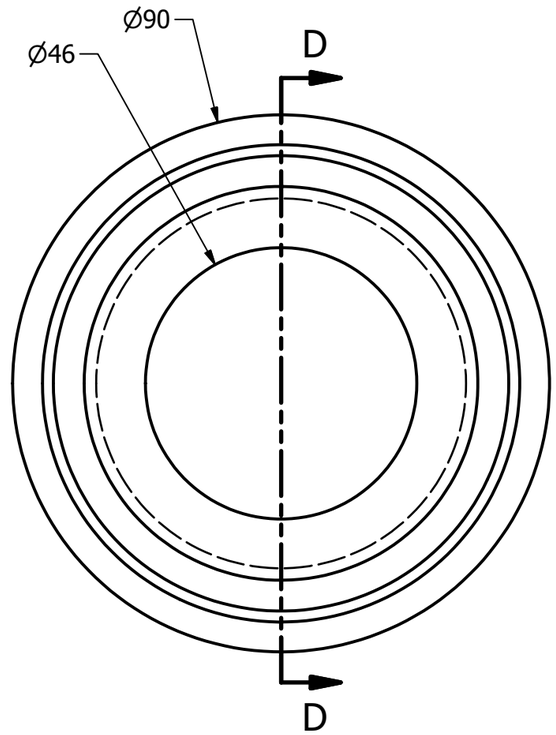

WHEEL
SCALE 1 : 1

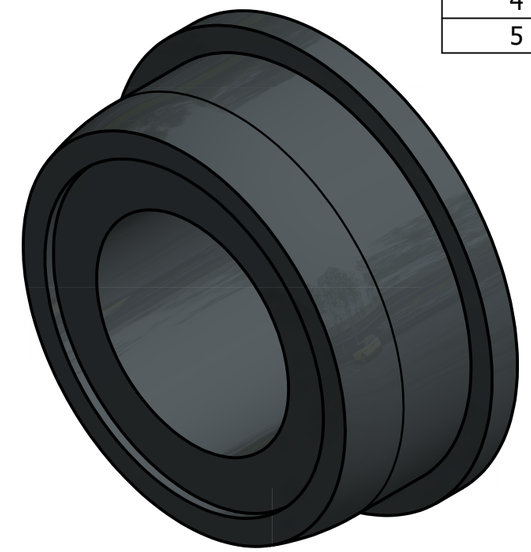

METRIC

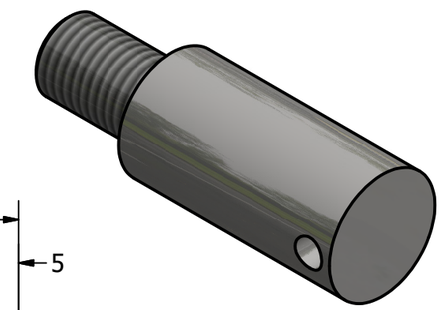

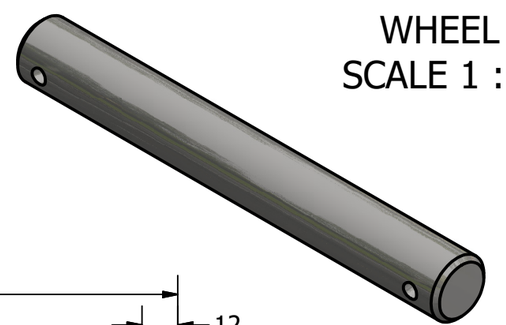

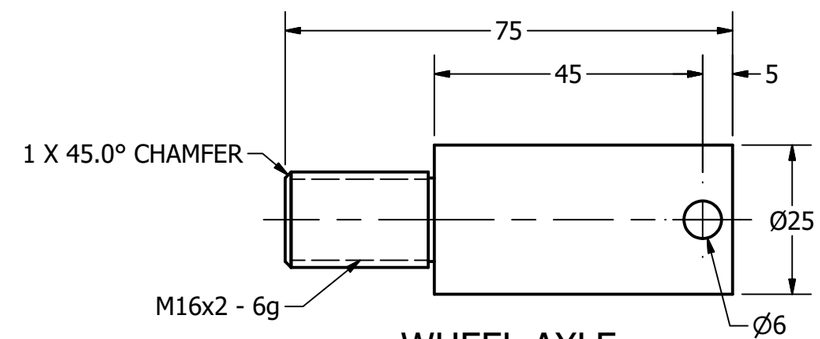

WHEEL AXLE
SCALE 1 : 1

LEGEND:

Ø	DIAMETER
R	RADIUS
°	DEGREES
OD	OUTSIDE DIAMETER
ID	INSIDE DIAMETER
THK	THICK
LG	LONG

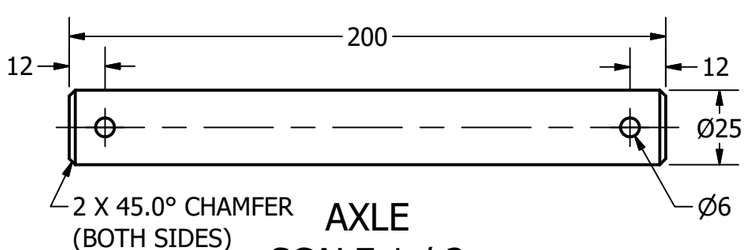

AXLE
SCALE 1 / 2

DIGITAL DESIGN
GRAPHICS
TECHNOLOGY

WWW.DDGT.NET

TOLERANCES UNLESS SPECIFIED
MILLIMETERS
WHOLE NUMBERS = ±.5
X = ±.25
XX = ±.12

ANGLES ±1 DEGREE

SURFACES 32

COURSE:	DDGT 120
INVENTOR DRAWING NAME:	TROLLEY
FIG #:	14-83
DRAFTER:	M. DOYEL
DATE:	11/27/2017
SCALE:	AS NOTED
PAGE:	6 OF 6